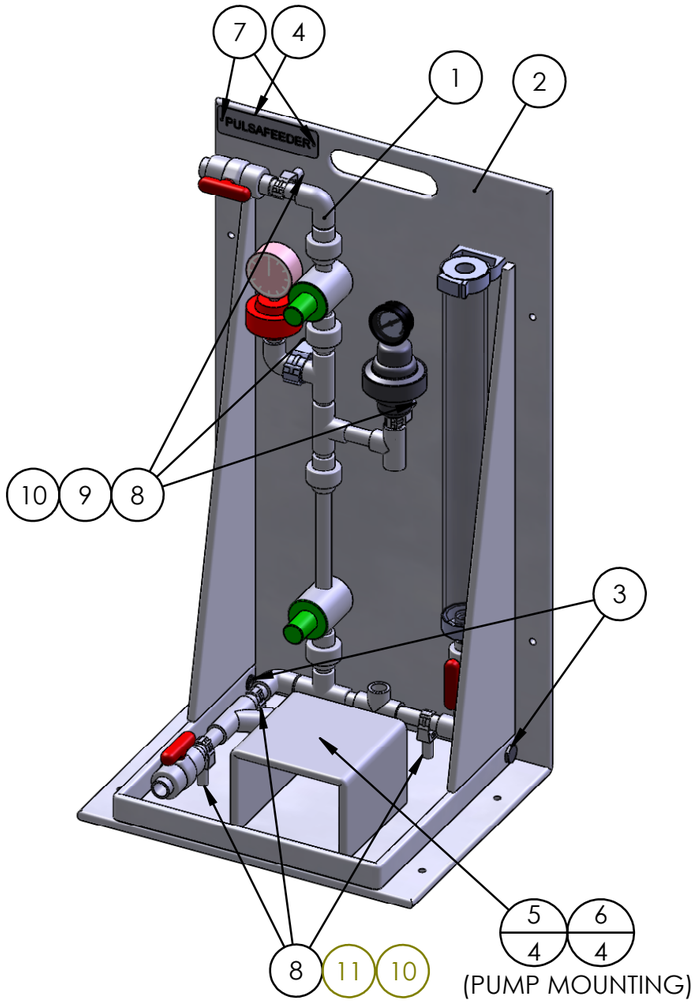

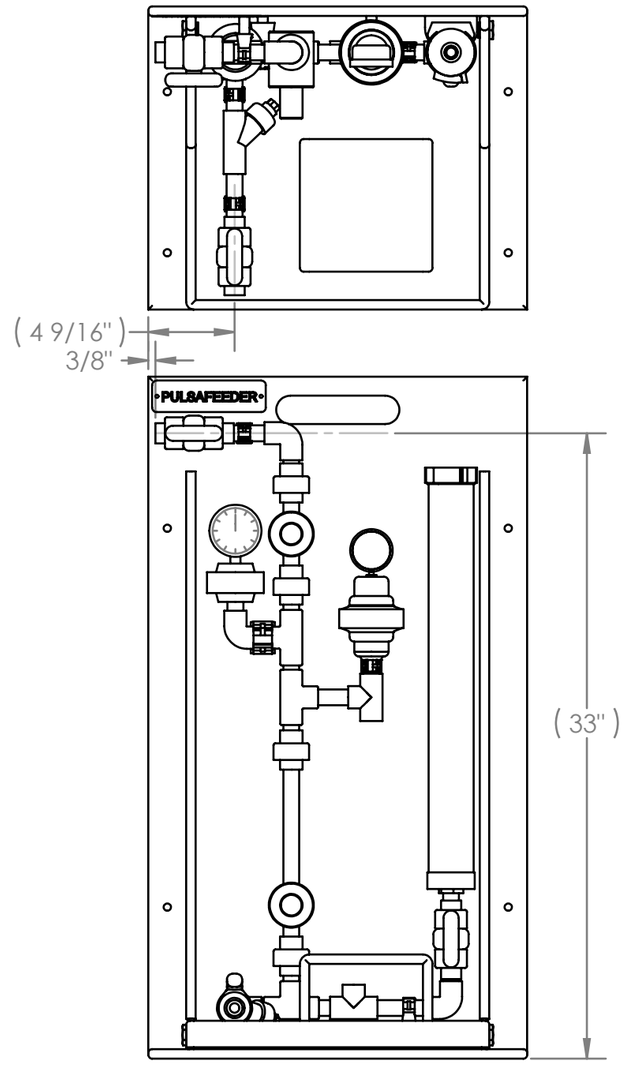

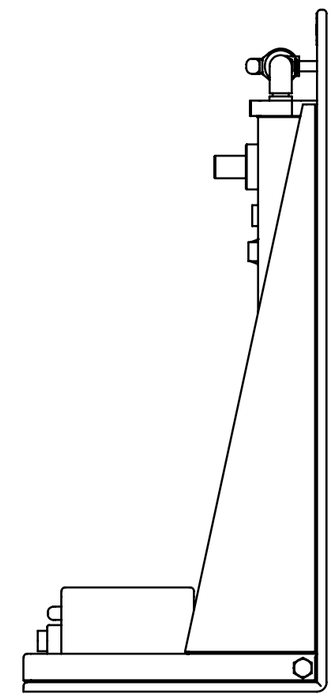

REVISIONS			
REV.	DESCRIPTION	DATE	APPROVED
A	RELEASE ECO 00223	11/24/08	MD
B	ADD LONGER SCREWS FOR NEW SPACERS ECO 00334	01/08/10	JH

BILL OF MATERIAL			
ITEM NO.	PART NUMBER	DESCRIPTION	QTY.
1	PES00034-001	PIPING ASSEMBLY, SIMPLEX - STANDARD HIGH FLOW(VITON SEALS)	1
2	PES00000	SKID BASE WELDMENT, SIMPLEX/STANDARD	1
3	03-043-00	PLUG, PVC-80, 1/2" T	2
4	J25334	PULSAFEEDER NAME PLATE	1
5	U0810386	#10-32 X 1" LNG SCREW	4
6	L9804000-000	#10-32 LOCK NUT	4
7	U0900857	SCREW, (SST),6-20 X .38 TYPE-BT PHP	2
8	06-011-02	#10-32 TEE NUT	6
9	U0810036	#10-32 X 1.7" SCREW	3
10	L9801300-188	#10 FLAT WASHER	6
11	L9803300-188	SCREW(SST), #10-32 X 2.0 PHP	3

PROPRIETARY AND CONFIDENTIAL
THE INFORMATION CONTAINED IN THIS DRAWING IS THE SOLE PROPERTY OF PULSAFEEDER SPO. ANY REPRODUCTION IN PART OR AS A WHOLE WITHOUT THE WRITTEN PERMISSION OF PULSAFEEDER IS PROHIBITED.

UNLESS OTHERWISE SPECIFIED:

DIMENSIONS ARE IN INCHES
TOLERANCES:
FRACTIONAL±1/64
ANGULAR: ± 1/2°
X.X=.050in.
X.XX=.015in.
X.XXX=.005in.

INTERPRET GEOMETRIC TOLERANCING PER: ASME Y14.5M-1994

MATERIAL (SEE NOTES)

FINISH (SEE NOTES)

DO NOT SCALE DRAWING

	NAME	DATE
DRAWN	PEC	11-24-08
ENG APPR.	MD	11-24-08

COMMENTS:

PULSAFEEDER IDEX CORPORATION

TITLE: SKID ASSEMBLY, SIMPLEX/STANDARD, HIGH FLOW (VITON SEALS)

SIZE B | DWG. NO. PES1S-VHF | REV B

SCALE: 1:1 | SHEET 1 OF 1